GRAVITY™

STANDER

USER MANUAL

Our passion – your independence!

5 903240 632862

CAUTION! Manufacturer takes responsibility for proper usage of the device only when the product was purchased from qualified Akces-Med employee or at specialized medical store!

CAUTION! AKCES-MED Ltd. reserve the right to introduce technical and trading changes in the content of the instruction without warning.

Medical product first class according to the Regulation 93/42/EWG of European Parliament and Council regarding medical products. For this product the producer issued relevant declaration of conformity.

Akces-Med Sp. z o.o. Company introduced quality management system ISO 13485 regarding production, sales and service. The system is certified by Det Norske Veritas.

CONTENTS

1. The purpose of user manual.....5
2.Indications for use.....5
3. General characteristics of stander.....6
3.1 Standard equipment 6
4. Size table.....7
5. Description how to use stander 8
6. Description how to use stander 17
7. The use of Stander.....18
7.1 Preparation of the patient.....18
7.2 How to use stander.....19
7.3 Upright position.....20
8. Safety rules.....22
9. Maintenance and cleaning.....25

INTRODUCTION

GRAVITY ™ is a stable and durable device, enabling the patient to adopt passive upright position. The device is easy to operate, whereas the system of supports makes the patient feel safe and confident. Pelvic and chest brace completely adapts to the patient's body, greatly influences his proper upright standing position. By using a gas spring you can easily set the patient either in prone or supine standing position. Additionally, the GRAVITY ™ is equipped with four rotating castors which enable its easy relocation along with the patient. A variety of design solutions of this device influence positive development of the patient as well as make it easier to overcome the results from injury or mobility limitations.

The replacement of the electrical supply system, typically used in this type of devices, by the swivel mechanism made the device more user-friendly. No need to charge the battery and control its power level will eliminate a lot of problems and inconveniences regarding the use of electrical supply. In order to set the patient in upright position, you only need to release the lever of the gas spring, and then set the device in the desired position. By using such innovative mechanism supported by the work of the gas spring, the operation of the device does not require much effort regardless of the patient's weight. The operator of the standing frame is able in just a few seconds to change the position of the patient, for example, in the case of his fainting.

Please read the manual carefully. You will find there detailed information about the product and learn how to effectively and safely use it.

If you have any questions or remarks, do not hesitate to contact with us:

Medical consultant: mobile +48 516 183 883
Akces-MED Sp. z o.o.: ph. +48 17 864 04 77
e-mail: export@akces-med.com

Thank you for purchasing our product.

CAUTION! Before using the product, user is obliged to familiarize himself/herself with user manual. Remember that complying with guidelines is highly important. It assures safety and extends durability as well as aesthetics of the device.

1 THE PURPOSE OF USER MANUAL

The present user manual contains basic information which is essential for proper usage, preparation, maintenance, cleaning and guarantee conditions regarding **GRAVITY™** stander.

User manual should be kept in easily accessible place. It is designed for people who look after disabled children, and for both doctors as well as physiotherapists who operate the device.

CAUTION! Before using the product, user is obliged to familiarize himself/herself with user manual.

Remember that complying with guidelines is highly important. It assures safety and extends durability as well as aesthetics of the device

2 INDICATIONS FOR USE

The device is recommended for people in the following cases:

- Degeneration conditions.
- Brain and spinal cord disorders with paraplegia, hemiplegia, balance and motor coordination disorders.
- Demyelinating disease (e.g. multiple sclerosis – SM).
- Meningocele.
- Muscles diseases with weakness and paralysis (dystrophy, myasthenia gravis, myositis).
- Genetic disorders.
- Degeneration and metabolic disorders.
- After head and spinal cord injuries and spine trauma with paralysis and paresis with paraplegia, especially in quadriplegia condition (as a stage of rehabilitation process or permanent orthopedic support).
- Cerebral palsy – various types and forms.

3 GENERAL CHARACTERISTICS OF STANDER

3.1. Standard equipment

1. Headrest with special opening for the face.
2. Backrest / bed.
3. Chest brace.
4. Pelvic brace.
5. Adjustable knee supports.
6. Footrest with footplates and feet stabilizing belts.
7. Frame with castors and brakes.

3.2.Additional equipment

GVY_135 Hip guide

GVY_155 Plateral supports

GVY_424 Handsgrips

4 SIZE TABLE

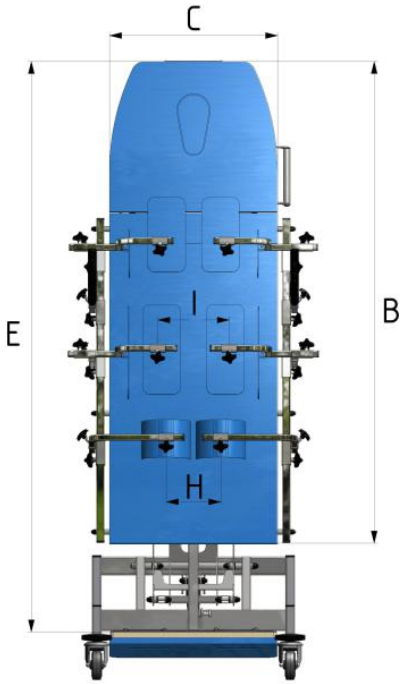

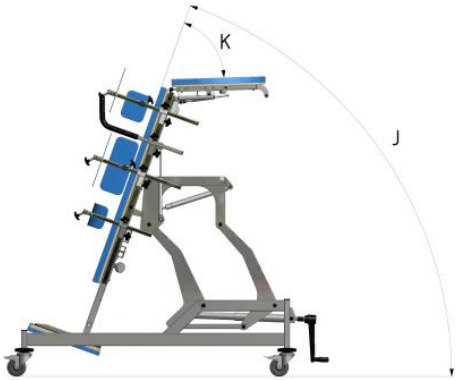

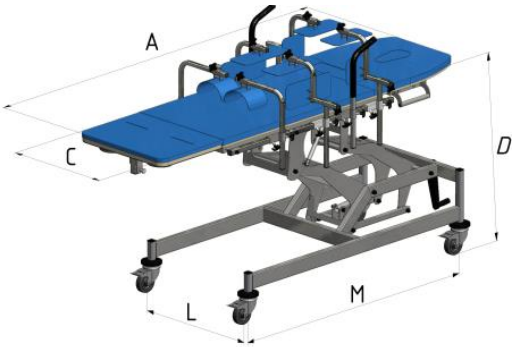

Size Table

Symbol	Measurement	Unit	Size 1
A	Backrest length in lying position	[cm]	200
B	Backrest length in standing position	[cm]	160
C	Backrest width	[cm]	55
D	Backrest height from the floor in lying position	[cm]	51-115
E	Distance from the headrest to the platform	[cm]	170-190
F	Footplates length	[cm]	30
G	Footplates spacing	[cm]	16-44
H	Knee supports spacing	[cm]	16-42
I	Chest/Hip support width	[cm]	16-47
J	Tilting range	[°]	0-84
K	Headrest tilt angle	[°]	-10-90
L	Base width (wheel axis)	[cm]	64
M	Base length (wheel axis)	[cm]	133
	Maximum user weight	[kg]	120
	Indicative user height	[cm]	140-190

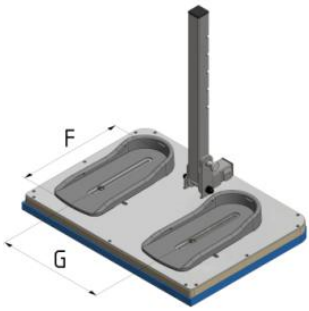

Weight and dimensions of the device

Measurement	Unit	Size 1
Width	[cm]	79
Length	[cm]	175
Height	[cm]	49
Weight	[kg]	63

5 DESRIPTION HOW TO USE STANDER

PRONE STANDING

SUPINE STANDING

5.1. Operation of the standing frame – GENERAL INDICATIONS

5.1 Height adjustment of the standing frame

In order to raise the standing frame, you should turn the crankshaft located under the headrest until you reach the desired height.

CAUTION! Pay your attention during the height adjustment. Please do not place the fingers between the bed and frame during adjustment.

5.2. Knee supports and knee pads adjustment

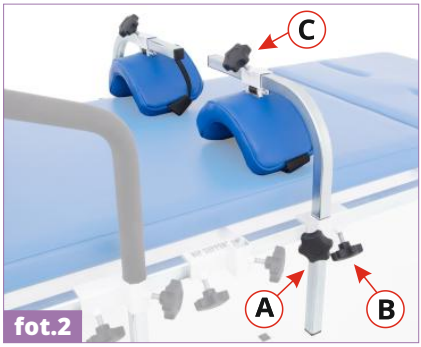

fot.2

A – Height adjustment knob relative to the backrest / bed

B – Knee support adjustment knob lengthwise the backrest / bed

C – Knee support spacing knob

5.3. Footrest

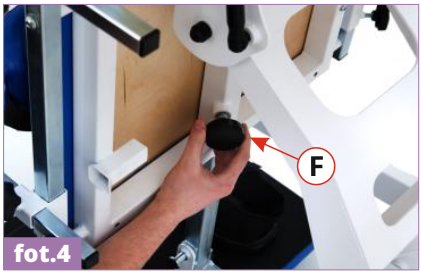

fot.4

F – In order to adjust the footrest height, you should pull the pin with knob and set the desired height. It should be noted if the pin jumped into the hole and the footrest is completely blocked. At the end, tighten the knob.

5.4. Footplates

In order to change the footplates setting, you should loosen the indicated screw by using the Allen wrench (fig.5).

fot.5

fot.6

fot.7

5.5. Chest and pelvic brace

Braces adjustment takes place by use of Velcro straps. Braces should be additionally secured by clasping the buckle.

fig.8

fig.9

CAUTION! Keep in mind that after the each adjustment, you should tighten the adjustment knobs and fastenings.

5.6. Bed mode

In order to prepare the standing frame to the bed mode, you should:

STEP 1. Fold the footrest, previously pulling the indicated pin (fig.10).

fot.10

fot.11

fot.12

STEP 2. Disassemble the knee supports and handgrips. In order to do that, loosen the A and D knobs (fig.13).

fot.13

After their removing , put their profiles into a specially prepared slots under the standing frame bed / backrest. (fig.14).

fot.14

fot.15

fot.16

CAUTION! The knee supports should be put in a way showed in the picture, so that to not collide with other standing frame elements (fot.17).

fot.17

STEP 3. In the headrest there is a special opening for the face used for the prone standing or prone lying position.

fot.18

fot.19

5.7. Supine standing

In order to prepare the standing frame to the supine standing, you should:

STEP 1. Disassemble the knee supports and handgrips according to the instruction (see page 9, 5.2, 5.3);

STEP 2. Set the footplates in the supine standing mode (fig.20) (adjustment – see page 10, point 5.4);

STEP 3. Lock the wheels;

STEP 4. Put the patient on the back, and then secure him with the properly adjusted chest and pelvic brace (see page 10, point 5.5), fasten the footplates belts (see page 10, point 5.4); Assemble the knee supports and the handgrips, make their adjustment (knee supports – see page 9, point 5.2), (the handgrips see page 17, point 6.3);

SUPINE STANDING

fot.20

STEP 5. Raise the standing frame backrest /bed to the maximum height (see page 8, point 5.1).

STEP 6. The caretaker or the person trained to do so can begin the upright standing position process of the patient.

In order to set the standing frame into the standing position, pull the pin securing the lying position and simultaneously release the lever of the gas spring. When holding the gas spring lever, set the desired position.

fot.21

fot.22

CAUTION! It is essential to not let the gas spring lever to release automatically especially during the process of upright standing.

CAUTION! Pay your attention during the process of standing. Please do not place the fingers between the bed and frame during the process of standing.

When you set the standing frame to the desired angle, release the lever which will lock the gas spring at a selected angle.

STEP 7. To end the process of upright standing, release the gas spring lever once again and rotate the standing frame to the horizontal position. **Make sure that the standing frame has been completely locked at the horizontal position!** Afterwards, unclip the security belts and remove the patient from the device.

5.8. Prone standing

In order to prepare the standing frame to the **prone standing**, you should:

STEP 1. Disassemble the knee supports and handgrips according to the instruction (see page 9, point 5.2, 5.3);

STEP 2. Set the footplates in the prone standing mode (fig.23) (adjustment – see page 10, point 5.5);

STEP 3. Lock the wheels;

PRONE STANDING

STEP 4. Put the patient in the prone position, and then secure him with the properly adjusted chest and pelvic brace, (see page 10, point 5.6), fasten the footplates belts (see page 10, point 5.5);

fot.23

STEP 5. Raise the standing frame backrest /bed to the maximum height (see page 8, point 5.1).

STEP 6. Prone upright standing process is the same as in the case of supine upright standing (look page 13, STEP 6).

CAUTION! It is essential to not let the gas spring lever to release automatically especially during the process of upright standing.

STEP 7. Afterwards, set the headrest to the prone standing position . The headrest can be set at any angle but it is highly recommended to set it parallel to the ground.

In order to do that, you should release the red lever located behind the backrest (fig.24). and simultaneously set the desired angle. It will act as a hand support or table.

fot.24

fot.25

fot.26

CAUTION! Pay your attention during the headrest tilting. Please do not place the fingers between the headrest and frame during adjustment.

6 ADDITIONAL EQUIPMENT

6.1 REF GVY_135 Hip guide

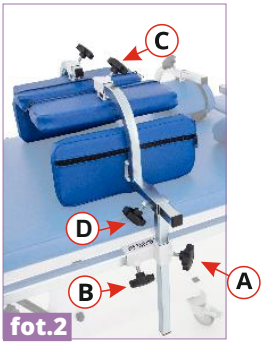

fot.2

A – Height adjustment knob relative to the backrest / bed
B – Hip guide adjustment knob lengthwise the backrest / bed
C – Hip guide spacing knob
D - Hip guide spacing knob

6.2 REF GVY_155 Lateral supports

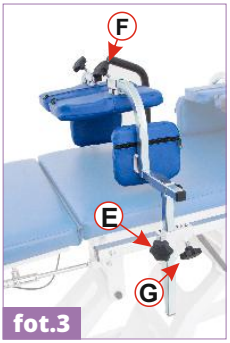

fot.3

E – Height adjustment knob relative to the backrest / bed
F – Lateral support spacing knob
G – Lateral support adjustment knob lengthwise the backrest / bed

6.3 REF GVY_424 Handsgips

fot.4

H – Handgrip adjustment knob lengthwise the backrest /bed
I – Height adjustment knob relative to the backrest /bed

7 THE USE OF STANDER

CAUTION! Stander **GRAVITY™** has to be used with compliance to guidelines included in this user manual. Remember to use the product only with someone who is trained and knowledgeable.

7.1. Preparation of the patient

Before using the product, it is essential to make sure that:

- patient's outfit is light and comfortable sporty clothes are advisable,
- shoes should be comfortable and, moreover, they should stabilize ankle,
- due to hygienic reason and to avoid abrasion it is advisable for the patient to always wear clothes when using the device, skin must not be naked especially in places of regular contact with upholstery,
- drains, bags, catheters etc. if applied, have to be secured to function properly and not to disturb during using the product,
- if it is necessary for a patient to wear orthopedic supply (collar, corset, orthesis, shoes) if it is recommended by doctor.

CAUTION! Outfit should protect patient's skin from direct contact with upholstery as well as other parts of equipment.

CAUTION! Only doctor can make a decision concerning using any kind of orthopedic supply!

7.2. How to use stander

1. Before use it is necessary to:
   - unfold the device;
   - place the device on even ground in a way that it is easy to reach standing frame and person who sits inside; remember to keep standing frame away from fire and high temperature
   - make sure that all parts are serviceable, correctly mounted and stable
   - check castors and brakes
   - lock brakes
   - adjust the device according to patient's measurements

Equipment works correctly only when the device is adjusted according to patient's height as well as weight. Remember to take all these measurements into account while purchasing the product. Correct adjustment is the most important due to the fact that only then the product is safe. It is forbidden to force child to keep specific position because he/she will feel uncomfortable and it may lead to wrong posture.

CAUTION! First adjustment of standing frame can be performed only by someone who is traned. Further adjustment is performed by patient's relatives who had proper training concerning the usage as well as adjustment of this device. Remember that correct adjustment is essential due to the fact that the product is safe and, moreover, the rehabilitation process is proceeding correctly.

CAUTION! Remember to make sure that all belts and locking are correctly adjusted and fastened. Check also if fastenings from adjustable elements are firmly tightened!

7.3. Upright position

CAUTION!

The length of time for upright position process is different for each patient. It is recommended to extend this time during the initial period (adaption period for the change of position). Either doctor or physiotherapist can make decision concerning the length of upright position process. Upright position process has to be always performed under the supervision of trained person!

It is recommended to divert patient's attention during upright position process by:
- manipulation games
- educational games
- touch stimulation and others

CAUTION! It is highly important to adjust the device to the patient before using it!

CAUTION! Make sure that all belts as well as fastenings from adjustable elements are correctly adjusted and fastened.

CAUTION! It is forbidden to leave the patient unattended!

CAUTION! First adjustment of standing frame can be performed only by someone who is traned.

CAUTION! First adjustment of standing frame can be performed only by someone who is traned. Further adjustment is performed by patient's relatives who had proper training concerning the usage as well as adjustment of this device. Remember that correct adjustment is essential due to the fact that the product is safe and, moreover, the rehabilitation process is proceeding correctly.

CAUTION! Incorrect adjustment of the device can lead to side effects such as: fainting, body deformities, overloading joints. It is highly advisable to adjust the device before every use of a standing frame. This adjustment has to be done only by a trained person or therapist. If any of these side effects appear, it is highly important to stop the upright position process, take out the patient from the device and lie him/her down. If these undesirable side-effects still occur it is necessary to contact doctor. If these side effects disappeared, remember to inform doctor so as to make decision concerning further upright position process.

8 SAFETY RULES

CAUTION! Stander **GRAVITY™** has to be used in compliance with guidelines in this user manual.

It is highly important to consult either doctor or physiotherapist in order to make right decision concerning the choice of **GRAVITY™** and its size. It is also essential to familiarize with the guidelines described in user manual before using the device.

1. Before use it is necessary to:

   - make sure that there are no damages or different faults which could endanger patient's life; check if all parts are working and are correctly mounted and, moreover, check if they are not broken;
   - check if all screws, knobs and all glued, sewed or tapped parts are tightened;
   - check if brakes are operating correctly;
   - check if buckles are operating correctly;
   - always use safety belts, Velcro tapes should overlap min. 8cm;
   - adjust the device according to patient's measurements and needs e.g. the adjustment of footplate etc.;
   - make sure that all movable parts and knobs for adjustments are stable and locked;
   - secure patient with the aid of elements such as foot stabilizing belts, chest and pelvic brace, knee supports. It is highly important to secure patient because it safeguards him/her from falling out. If abduction contracture occurs, it is recommended to use abduction block in order to prevent ulcers between knees.
2. It is forbidden to use the device for different purposes that it is intended to.
3. It is forbidden to use the device when it is damaged or any part is missing.
4. It is forbidden to leave the patient unattended.
5. The device should be used only when there is someone who is trained and knowledgeable.

6. It is forbidden to leave the device and the patient on unstable ground unattended, even if the brake is engaged.
7. It is forbidden to either go up or down the stairs; it doesn't matter if the patient is placed in the device or not.
8. It is important to engage brake during getting into and getting out the device.
9. Make sure that all limbs are not close to spokes or other adjustable elements.
10. Although the device and the upholstery are made of fire-resistant materials, please pay your attention when approaching to sources of fire or sources of high temperature during using the device. Moreover, device shouldn't be stored in rooms with high humidity.
11. Secure the device during transportation in order to avoid any possible damages. Manufacturer doesn't take responsibility for damages which appeared due to improper preparation of the device during transportation.
13. It is essential to not let the gas spring lever to release automatically especially during the process of upright standing.

CAUTION! This device can be only used inside the buildings.

CAUTION! The device contains small parts which children may swallow.

CAUTION! It is forbidden to make any changes concerning device's structure due to the fact that it is dangerous and it results in loosing warranty.

CAUTION! The weight of user should not be bigger than maximal weight described on page 7 where you will find information regarding this issue.

1) AKCES-MED Sp. z. o. o sells products free from manufacturing defects or faults.
2) Manufacturer gives the purchaser 36-month guarantee from the date of purchase. All defects revealed during warranty period will be repaired free of charge.
3) All defects which appear after warranty period can be repaired only when the user will pay for it. This rule doesn't apply to refunded products - user can ask National Health Refund for refund.
4) Manufacturer claims that the product can be used for 36 months. User can use this product after this period only when he/she will send the device to manufacturer so as to service it. Next, manufacturer determines again how long the product can be used and, moreover, the date of the next service will be determined.
5) If product is damaged, please contact our dealer or AKCES-MED customer service (ph. 17/864 04 70)

9 MAINTENANCE AND CLEANING

Stander should be kept clean and used in compliance with the manufacturer's recommendations. The device should be kept in clean, dry and ventilated room. Maintenance as well as cleaning have to be performed at least once a month. Regular cleaning and maintenance of stroller are indispensable to maintain its correct functionality as well as safety.

It is highly advisable to remember about proper maintenance in order to extend product's aesthetics. So as to do that, it is essential to comply with these guidelines:

1. It is recommended to clean upholstery with the aid of cleaning product, soft sponge and warm water. If you use sponge which is too wet, stain may get bigger, upholstery may be destroyed. It is necessary to remember that the excess of dampness should be removed from fabric before next cleaning. Please rinse upholstery with warm water and clean white cloth once stain is removed.
2. It is forbidden to soak upholstery!
3. It is forbidden to clean upholstery with the aid of hard brushes.
4. It is forbidden to clean upholstery with strong chemical agents such as solvent or caustic chemicals.

CAUTION! Akces-MED Sp z o. o takes no responsibility for damages caused by use of wrong clearing agent.

5. It is forbidden to soak upholstery during cleaning. Remember that upholstery has to be always dry before using.
6. It is forbidden to clean, make any changes and maintain stroller during using it.
7. All metal as well as plastic elements should be cleaned by hand with the aid of general cleaning products. Remember to familiarize yourself with cleaning product's leaflet.

CAUTION! Remember that upholstery has to be always dry before using!

Before using it is necessary to:

- clean wheels;
- check if base as well as wheels are correctly mounted; check if brake stops turning wheel;
- make sure that all wooden parts e.g. tray don't have splinters;
- check if stroller construction is free of breaks or any kinds of deformities;
- check if all movable parts are working and all screws, nuts, knobs etc. are correctly tightened;
- check if belts, vests, trunk belts, feet stabilizing belts etc are not frayed; check if buckles and clamps work correctly.

CAUTION! Manufacturer takes responsibility only for hidden faults or damages which appeared despite the fact that user complied with the guidelines.

CAUTION! In case of any damages, it is essential to contact the person who sold you the product.

ORTHOPAEDIC DEVICES MANUFACTURER

Akces-MED Sp. z o.o.
Jasionka 955B
36-002 Jasionka
tel. (17) 864 04 77

www.akces-med.com
e-mail: export@akces-med.com

Authorised Dealer

Date of issue: 19.03.2015 **The last update:** 07.04.2017

Our passion – your independence!